CRD 05 Series

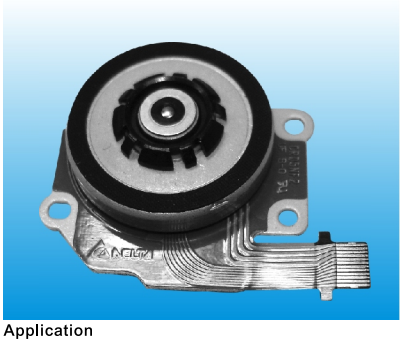

Application
1.BLDC Spindle Motor
2.Car Use Portable/ Audio-Viedo Machine

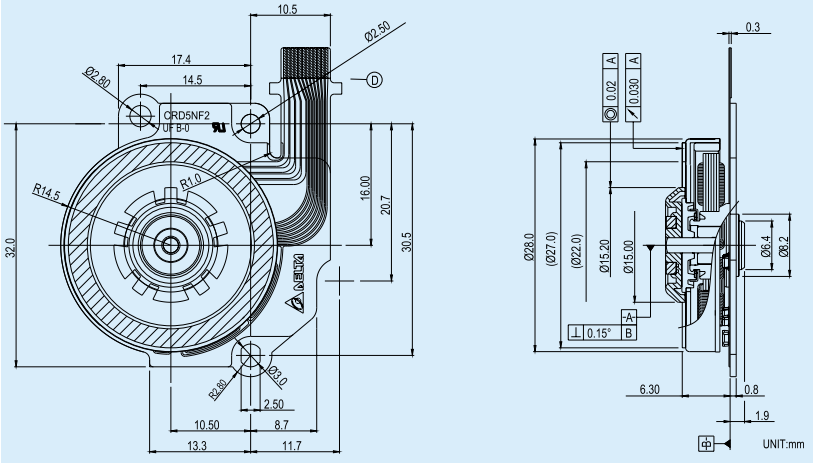

Specifications

Model No.	Working Voltage (V)	Rated Voltage (V)	Rated Speed (rpm)	Load Current (mA)	No Load Speed (rpm)	No Load Current (mA)	Starting Torque (mN·m)	Starting Current (mA)
CRD05NF001	3~15	8.0	5500	280	6800	110	9.2	700

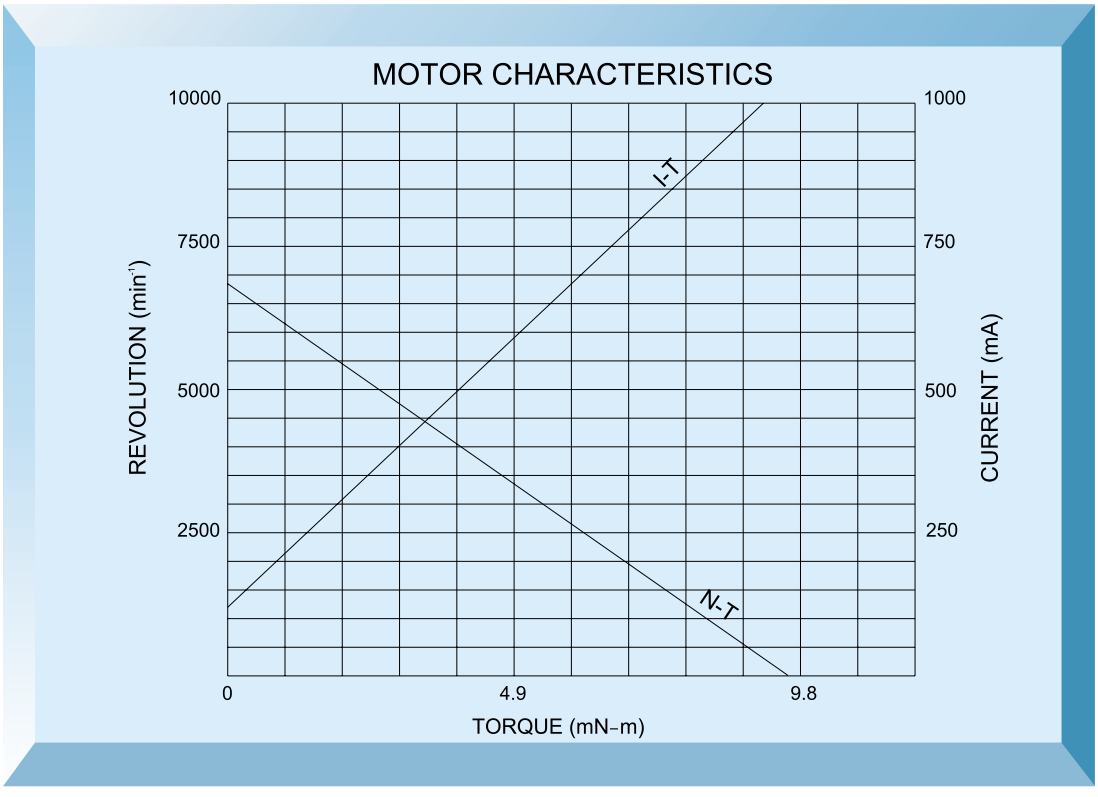

* All readings are typical values.
* Specifications are subject to change without notice.

Download from Www.Somanuals.com. All Manuals Search And Download.

Free Manuals Download Website

http://myh66.com

http://usermanuals.us

http://www.somanuals.com

http://www.4manuals.cc

http://www.manual-lib.com

http://www.404manual.com

http://www.luxmanual.com

http://aubethermostatmanual.com

Golf course search by state

http://golfingnear.com

Email search by domain

http://emailbydomain.com

Auto manuals search

http://auto.somanuals.com

TV manuals search

http://tv.somanuals.com