Technical Information- Dishwasher

MDB8600AWB MDB8600AWQ MDB8600AWS MDB8600AWW
MDB9600AWB MDB9600AWQ MDB9600AWS MDB9600AWW

Due to possibility of personal injury or property damage, always contact an authorized technician for servicing or repair of this unit. Refer to Service Manual 16021814.

⚠ CAUTION

All safety information must be followed as provided in Service Manual 16021814.

⚠ WARNING

To avoid risk of electrical shock, personal injury, or death, disconnect power to dishwasher before servicing, unless testing requires power.

Specifications	MDB8600AW*	MDB9600AW*
Power Source		
Voltage AC	120 VAC	120 VAC
Amperage (Single Unit)	15 A	15 A
Frequency	60 Hz	60 Hz
Motor horsepower	1/3	1/3
Receptacle	N/A	N/A
Plug	N/A	N/A
Dimensions		
Height–overall	33 ½” to 35 ¼”	33 ½” to 35 ¼”
Width	23 7/8”	23 7/8”
Depth	23 1/2”	23 1/2”
Weight		
Un-crated	65 lbs.	65 lbs.

Benefits	MDB8600AW*	MDB9600AW*
Wash cycles	5	6
Heavy Wash	X	X
Normal Wash	X	X
Light Wash	X	X
Rinse Only	X	X
Auto Clean	X	X
Drying System	X	X
Features		
QuietSeries 300™	X	X
*Sanitizer	X	X
*ToughScrub™	X	X
*160° Wash		X
*Extra Rinse	X	X
1-9 Hour Delay Start	X	X
Control Lock	X	X
Energy Star	X	X
Active Vent Dry	X	X
Finer Filtration	X	X
Hard Food Disposer	X	X
Remaining Time Countdown Display	X	X
Integrated Control Panel		X
Angled Panel with Microprocessor Controls	X	
11 Touch Pad Controls	X	
13 Touch Pad Controls		X

*On selected models only

Component Specifications

WARNING

To avoid risk of electrical shock, personal injury, or death, disconnect power to dishwasher before servicing, unless testing requires power.

Illustration	Component	Test Procedure	Results
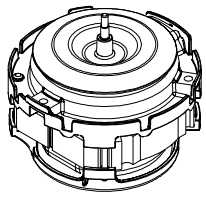	Dishwasher Motor CCW rotation only viewed from shaft end. 1/3HP 120V/60hz, 3.2 amps, 3250 RPM Main Wattage, 285 watts Start Wattage, 1115 watts	Measure resistance from ST5 (Motor Common – blue) to ST8 (Motor Main - yellow) ..... See Component Specifications/Motor Connections for details.	3 to 4 Ω
	Control Board	See Component Specifications/ Membrane Readings for troubleshooting/pin-out instructions.	
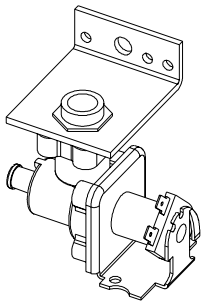	Water valve 120V/60hz, 7 watts 1.13 ± .10 gpm at 20-120 psi	Measure resistance from J6 Pin 4 Aqua (Float switch) to ST4 Black (Common)	1.1 k Ω (This value assumes the float switch is closed).
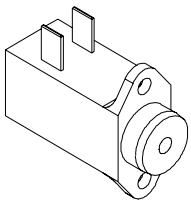	Vent wax motor 120V with 1/4" actuation stroke within 60 seconds	Measure resistance from J6 Pin 1 Purple (Vent) to ST4 Black (Common)	1.2 k Ω
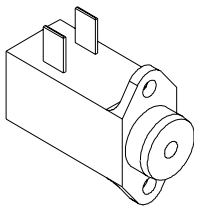	Dispenser wax motor 120V with 1/4" actuation stroke within 60 seconds	Measure resistance from J6 Pin 3 Tan (Dispenser) to ST4 Black (Common).	2 k Ω

Component Specifications

WARNING

To avoid risk of electrical shock, personal injury, or death, disconnect power to dishwasher before servicing, unless testing requires power.

Illustration	Component	Test Procedure	Results
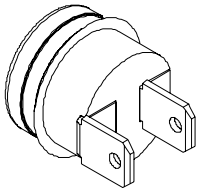	Limit Thermostat	Close on Temperature drop @ 149°F ± 7°F (Temp) ..... Open on Temperature drop @ 164°F ± 4°F (Temp)	0 Ω = Closed Infinite Ω = Open
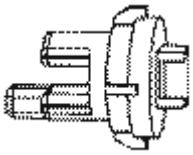	Sensor/Thermistor	10KΩ ± 3% at 77°F and 2.4 k Ω ± 6.5% at 140°F J5 pin 1 - Orange (Temp) to J5 Pin 4 - Red (Neutral)	Infinite Ω = Open 0 Ω = Closed
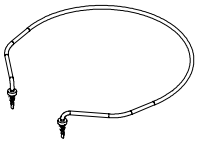	Heater/Heating Element 120v/60hz, 650 watts ± 5% in air, 830 watts ± 5% in coldwater	Measure resistance from ST1 Red/Black (Heater) to ST11 White (Common)	16 Ω (This value assumes the high limit thermostat is closed).
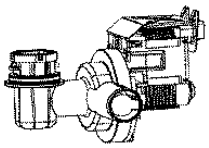	Drain Motor 120v/60hz	Measure resistance from ST6 Gray (Drain) to ST4 Black (Common) ..... See section “Motor Connections and Diagram” for wiring contacts.	25 Ω

Component Readings/Testing

WARNING

To avoid risk of electrical shock, personal injury, or death, disconnect power to dishwasher before servicing, unless testing requires power.

Manual Function Test

A Manual Function Test may be started by pressing the **Normal Wash** key 5 times followed by the **Start** key within 6 seconds.

The **Normal Wash** LED will **Flash** 3 times indicating manual test mode is active. Specific keypads will turn on or off a component as follows:

Heavy Wash	Wash Motor
Normal Wash	Drain Motor
Light Wash	Water Valve
Rinse Only	Soap Dispenser (cycle once) Rinse Aid (cycle twice)
Sanitize	Vent
Heated Dry	Heating Element

When a component is activated by pressing a specific keypad, the LED above the keypad will be **On**. The test will cancel 120 seconds after the last keypad is pressed. The display (if available) will show '99' until the remaining timeout period is less than 99 seconds. At this point it will countdown until the mode times out, is cancelled, or another key is pressed. To cancel test, press the **Start / Cancel** keypad.

Sales Floor Demo Mode

Press **Extra Rinse** keypad 5 times within 6 seconds. The LEDs will illuminate in a progressive order until all are lit. All LED's will stay on for 1 second then all go off simultaneously. The display (if available) will begin at '50' and sequence down to '0' at a 1 second interval and repeat until this mode is terminated. This mode will repeat.
To cancel, press the **Start / Cancel** keypad.

Diagnostic Tips

To check control LEDs, enter **Sales Floor Demo Mode**. If control fails to perform as described, replace control. To check control and components, enter **Field Service Test**. If control fails to perform sequence as described, and a fault is detected, determine failure as described in the **Field Service Test**. If a load component failure has been diagnosed, proceed to the **Manual Function Test**. To check individual load components for proper operation, enter **Manual Function Test**. Follow test procedure as described. Repair or replace component as needed.

Note: The **High Current** or **Low Current Motor Error** may be detected during a wash cycle selected by a consumer. If this happens, the control will go into a 30 second auto restart mode and shut down if the unit is not able to restart the motor.

Field Service Test

A Field Service Test may be started by pressing the **Heavy Wash** key 5 times followed by the **Start** key within 6 seconds. This test must be performed with clean water to insure proper sensor performance.

"88" will appear in the display (if available*) and the following sequence of events will occur:

SECONDS	FUNCTIONS / ACTIVE LOADS
106	Vent Wax Motor/Water Valve
5	Thermistor check/Turbidity Sensor check & calibration - no loads active.
120	Wash Motor/Vent Wax Motor/Dispenser Wax Motor
180	Wash Motor/Heater/Vent Wax Motor
120	Drain Pump
4	Water Valve

Time frame for Thermistor/Turbidity Sensor check & calibration may vary slightly.

The Field Service Test will not repeat. The **Heavy Wash** LED will **Flash** during the test mode. Indicator lights (except **Heavy Wash** and the Display) will illuminate per Sales Floor Demo Mode. If the dishwasher door is opened during the test, the test sequence will pause, and resume when the door is closed. To the cancel test, press the **Start / Cancel** keypad.

The control has been designed to test the Sensor Memory and Motor. During the Field Service Test, if a fault has been detected, the test will abort any time after the motor current has been checked and 2 or more LED's will begin to **Flash**. A **Memory / Software Check** will occur immediately after the test is started. The **(See Note**)** LED and one of the following:

Turbidity Sensor - failure - **Rinse Only** LED
Thermistor - failure - **Heavy Wash** LED
Motor - high current - **Normal Wash** LED
Motor - low current - **Light Wash** LED
Memory Failure - **Heated Dry** LED

* On select models
** On units with Front Controls only, this will be the **Clean** LED, on units with Top & Front Controls, this will be the **Delay** LED

Membrane Readings (Front Only Controls)

	Connector	Measure Between
Heavy Wash	J1	Pin 9 - Pin 5
Normal Wash	J1	Pin 9 - Pin 6
Light Wash	J1	Pin 9 - Pin 7
Rinse Only	J1	Pin 9 - Pin 8
Auto Clean	J1	Pin 10 - Pin 5
Start / Cancel	J1	Pin 10 - Pin 6
Delay	J1	Pin 10 - Pin 7
Heated Dry	J1	Pin 11 - Pin 5
Sanitize	J1	Pin 11 - Pin 6
Tough Scrub	J1	Pin 11 - Pin 7
Tough Scrub Plus	J1	Pin 10 - Pin 8
Extra Rinse	J1	Pin 11 - Pin 8
Model ID Jumper *	J1	Pin 12 - Pin 7

An unpressed switch will read as an open circuit.
A pressed switch will read as 10 k ohms.
* On select models

Membrane Readings (Front & Top Controls)

	Connector	Measure Between
Auto Clean	J1	Pin 10 - Pin 5
Heavy Wash	J1	Pin 9 - Pin 5
Normal Wash	J1	Pin 9 - Pin 6
Light Wash	J1	Pin 9 - Pin 7
Rinse Only	J1	Pin 9 - Pin 8
Quick Wash	J1	Pin 10 - Pin 6
Heated Dry	J1	Pin 11 - Pin 5
Sanitize	J1	Pin 11 - Pin 6
Extra Rinse	J1	Pin 11 - Pin 8
Tough Scrub Plus	J1	Pin 10 - Pin 7
160° Wash	J1	Pin 10 - Pin 8
Model ID Jumper *	J1	Pin 12 - Pin 8
Start / Cancel	J3	Pin 9 - Pin 5
Delay	J3	Pin 9 - Pin 6

An unpressed switch will read as an open circuit.
A pressed switch will read as 10 k ohms.
* On select models

Load Readings

	Measure between:	Result
Heater[1]	ST1 (Heater) - ST11 (Dlb Neutral)	16 ohms
Wash Motor	ST5 (Motor Common) - ST8 (Motor Main)	3 to 4 ohms
Drain Motor	ST6 (Drain) - ST4 (Dlb Line)	25 ohms
Vent Wax Motor	J6 Pin 1 (Vent) - ST4 (Dlb Line)	1.2 k ohms
Dispenser Wax Motor	J6 Pin 3 (Disp) - ST4 (Dlb Line)	2 k ohms
Water Valve[2]	J6 Pin 4 (Inlt) - ST4 (Dlb Line)	1.1 k ohms
Thermistor	J5 Pin 1 (Temp) - J5 Pin 4 (Neutral)	See Component Info

Notes:
1. This value assumes the high limit thermostat is closed.
2. This value assumes the float switch is closed.
3. Results are approximate values.

Electrical Diagnostics

WARNING

To avoid risk of electrical shock, personal injury, or death, disconnect power to dishwasher before servicing, unless testing requires power.

Resistance Check Points and Values

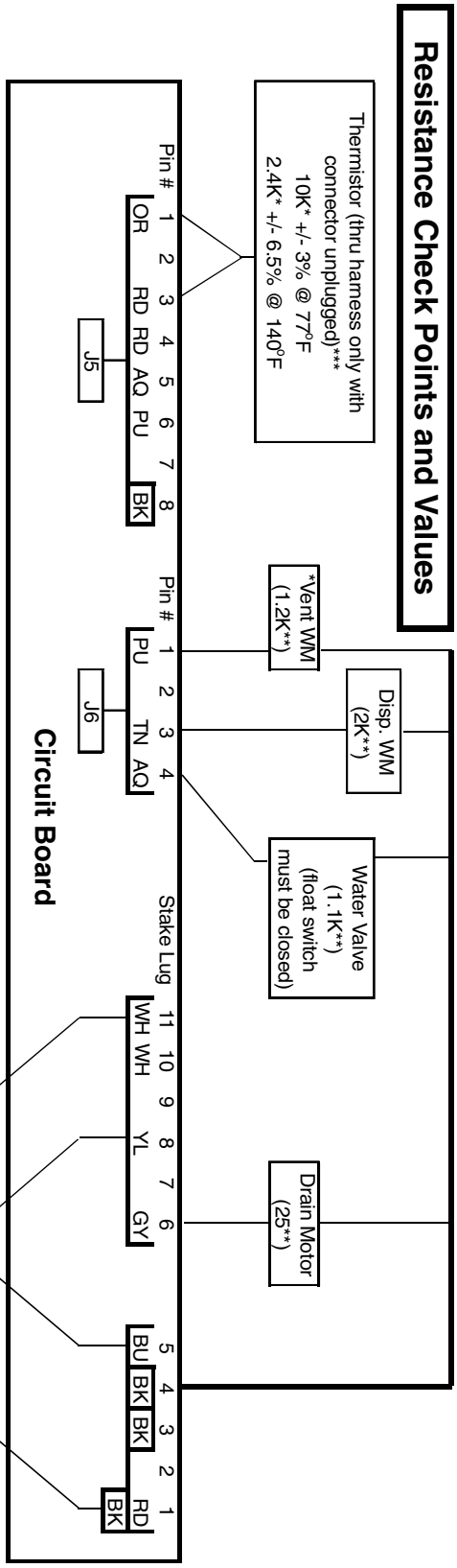

1. **Use the "Manual Function Test" [as described on the electrical schematic sheet (6 918139)] to check components before opening the door to perform continuity testing or replacing parts.**

2. **To check continuity from ends of power leads to control board through door switches:**
(A white plastic latch must be inserted in the latch assembly for this test.)
> With one ohm meter lead connected to the white (neutral) power lead, you should have continuity at stake lugs 10 & 11.
> With one ohm meter lead connected to the black (line) power lead, you should have continuity at stake lugs 3 & 4, and pin # 8 on connector J5.

3. Perform the resistance checks on the component(s) in question at the locations shown on the chart.

* Select Models Only.

** Nominal value for ohms of electrical resistance of component only. These values will vary slightly due to the additional resistance of the wire harness. Greater variation can occur if the component is still warm from being energized during testing.

*** A resistor in the control board wired in parallel will result in an approximate reading of 4.0 k ohms with connector J5 plugged in.

Always remove power to the unit before performing any resistance or continuity checks.

Motor Connectivity

WARNING

To avoid risk of electrical shock, personal injury, or death, disconnect power to dishwasher before servicing, unless testing requires power.

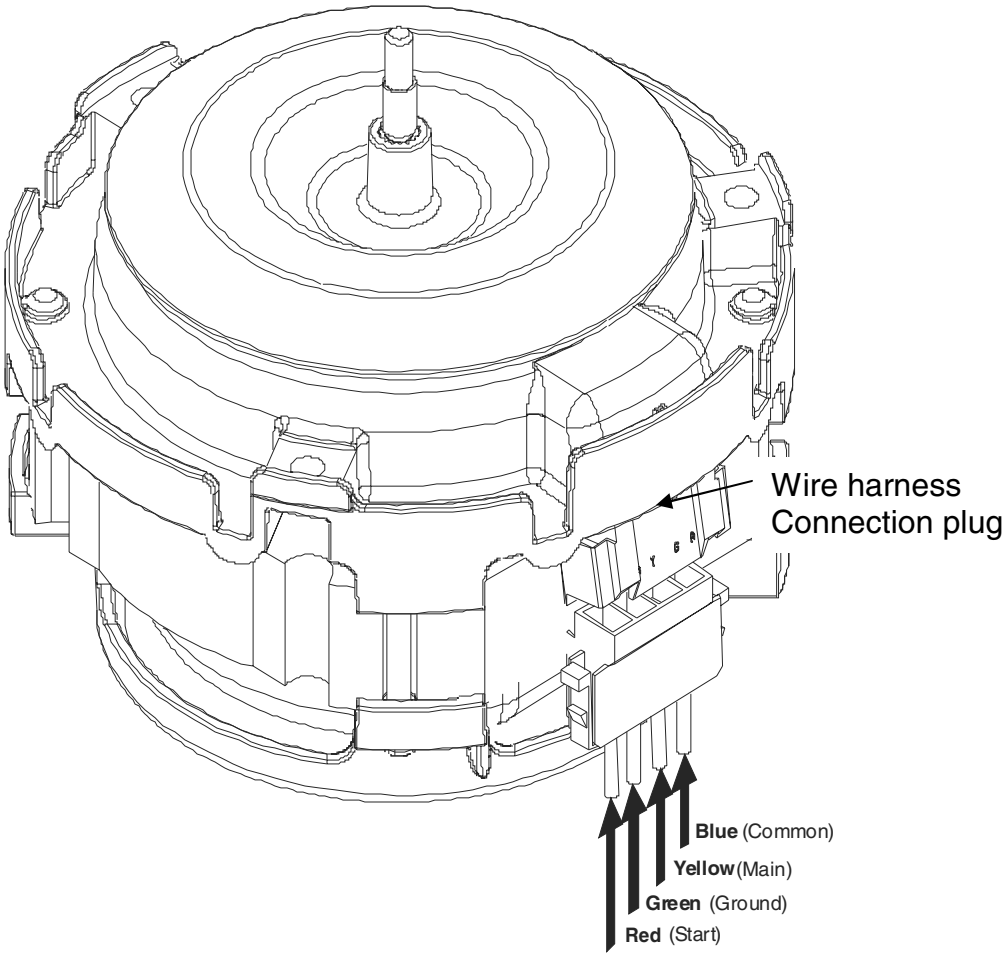

1/3HP
120V/60hz, 3.2 amps, 3250 RPM

Wiring Diagram

WARNING

To avoid risk of electrical shock, personal injury, or death, disconnect power to dishwasher before servicing, unless testing requires power.

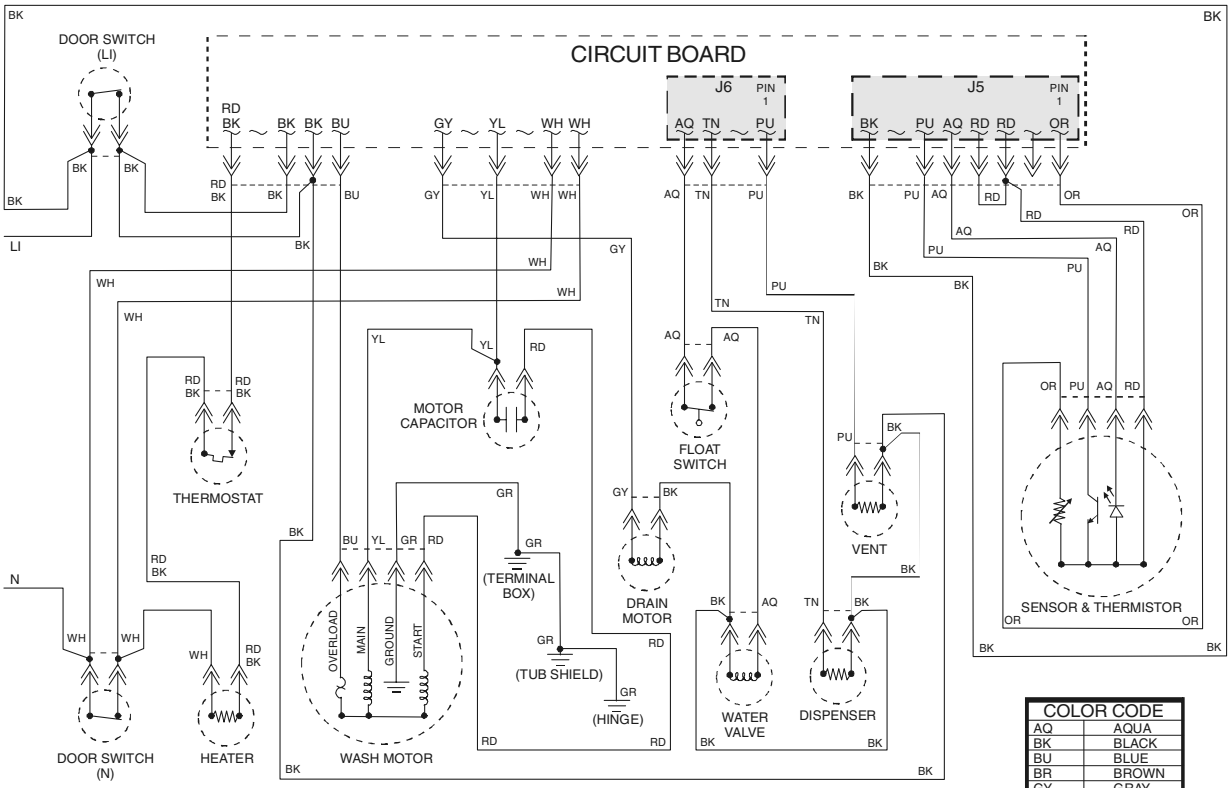

KEY	
┼	WIRES NOT CONNECTED
┼	WIRES CONNECTED

NOTE: SOME WIRES HAVE STRIPES. STRIPED WIRES ARE LABELED WITH THE SOLID COLOR FIRST AND THE STRIPE COLOR SECOND.

EXAMPLE: A RED WIRE WITH A BLACK STRIPE WOULD BE LABELED RD BK

COLOR CODE	
AQ	AQUA
BK	BLACK
BU	BLUE
BR	BROWN
GY	GRAY
GN	GREEN
OR	ORANGE
PK	PINK
PU	PURPLE
RD	RED
TN	TAN
WH	WHITE
YL	YELLOW

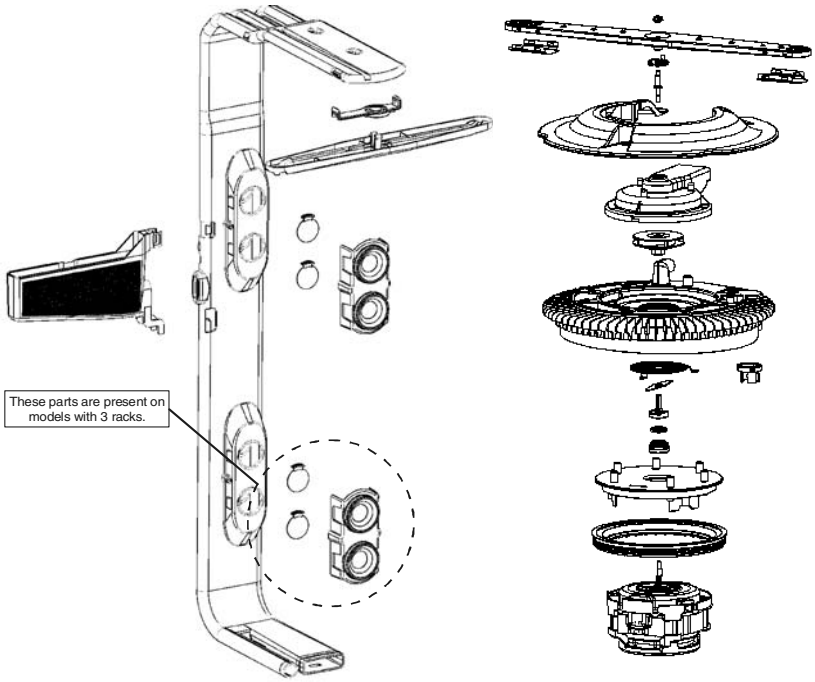

Component Information

Wash Motor	1/3 HP motor, 120V / 60hz, 3.2 amps, 3250 RPM Main wattage, 285 watts Start wattage, 1115 watts
Water Valve	120V / 60hz, 7 watts 1.13 ± .10 gpm at 20 - 120 psi
Heating Element	120V / 60hz, 650 watts ± 5% in air 830 watts ± 5% in cold water
Limit Thermostat	SPST ¼" terminal switch Close at 149° ± 7°F (65.0° ± 3.9°C) Open at 164° ± 4°F (73.3° ± 2.3°C)
Thermistor	Resistance and tolerance: 10k ohms ± 3% at 77°F (25°C) and 2.4k ohms ± 6.5% at 140°F (60°C)
Wax Motors	Vent - 120V continuous duty ¼" actuation stroke within 90 seconds Detergent & Rinse Aid - 120V incremental duty with ¼" actuation stroke within 90 seconds
Capacitor	300V / 50 - 60hz 185°F(85°C), 15µf + 10% / -5%
Drain Motor	45 watts

Cycle Chart

WARNING

To avoid risk of electrical shock, personal injury, or death, disconnect power to dishwasher before servicing, unless testing requires power.

RINSE ONLY CYCLE (9 Minutes)

FILL 1:36 min 1:46 max	RINSE 5:00	DRAIN 2:00	FILL 0:02

Available Options:
No options are available with the **Rinse Only** cycle.

QUICK WASH CYCLE (38 Minutes)

FILL 1:36 min 1:46 max	DET DISP	HEATED WASH 10:00	DRAIN 2:00	FILL 1:36 min 1:46 max	HEATED Rinse 15:00	RINSE AID DISP	RINSE 5:00	DRAIN 2:00	FILL 0:02

Available Options:
Extra Rinse - This options adds an additional fill between the main wash and the final rinse for an additional 5 minutes of unheated rinse.

LIGHT WASH CYCLE (82 Minutes)

FILL 1:36 min 1:46 max	HEATED PRE WASH 10:00	DRAIN 2:20	FILL 1:36 min 1:46 max	DET DISP	HEATED WASH 10:00	DRAIN 2:00	FILL 1:36 min 1:46 max	HEATED RINSE 15:00	TEMP CHECK 140°F	RINSE AID DISP	RINSE 5:00	DRAIN 2:00	FILL 0:02	**DRY CYCLE** 30:00

Available Options:
Extra Rinse - This option adds an additional fill between the main wash and the final rinse for an additional 5 minutes of unheated rinse.
Tough Scrub - This option adds and additional 18 minutes of heated wash to the main wash and 5 minutes of heated rinse to the final rinse.
Tough Scrub Plus - This option is the same as **Tough Scrub** but the main wash temp check is boosted to 145°F.

NORMAL WASH CYCLE (97 Minutes - min) (118 Minutes - max)

FILL 1:36 min 1:46 max	HEATED PRE WASH 8:00	DRAIN 2:20	FILL 1:36 min 1:46 max	DET DISP	HEATED WASH 26:00	HEATED WASH 2:00	TEMP CHECK SEE NOTE TC 1	DRAIN 2:00	FILL 1:36 min 1:46 max	HEATED PRE RINSE 10:00	DRAIN 2:00	FILL 1:36 min 1:46 max	HEATED RINSE 10:00	HEATED RINSE 10:00	TEMP CHECK SEE NOTE TC 2	RINSE AID DISP	RINSE 5:00	DRAIN 2:00	FILL 0:02	**DRY CYCLE** 30:00
		SKIP?				**SKIP?**					**SKIP?**				**SKIP?**					

Available Options:
Extra Rinse - This option adds an additional fill between the main wash and the final rinse for an additional 5 minutes of unheated rinse.
Tough Scrub - This option overrides the sensor's decision to skip cycle functions and adds an additional 7 minutes of heated wash to the main wash.
Tough Scrub Plus - This option is the same as **Tough Scrub** but the main wash temp check is boosted to 145°F.

TC 1: If sensor detects lighter soil, the temp check will be 128 ° F
If sensor detects heavier soil, the temp check will be 140 ° F
TC 2: If sensor detects lighter soil, the temp check will be 140 ° F
If sensor detects heavier soil, the temp check will be 145 ° F

HEAVY WASH CYCLE (130 Minutes - min) (131 minutes - max)

FILL 1:36 min 1:46 max	HEATED PRE WASH 8:00	DRAIN 2:20	FILL 1:36 min 1:46 max	HEATED WASH 10:00	DET DISP	HEATED WASH 18:00	TEMP CHECK 140°F	DRAIN 2:00	FILL 1:36 min 1:46 max	PRE RINSE 10:00	DRAIN 2:00	FILL 1:36 min 1:46 max	HEATED PRE RINSE 10:00	DRAIN 2:00	FILL 1:36 min 1:46 max	HEATED RINSE 20:00	TEMP CHECK 145°F	RINSE AID DISP	RINSE 5:00	DRAIN 2:00	FILL 0:02	**DRY CYCLE** 30:00

Available Options:
Extra Rinse - This option adds an additional fill between the main wash and the final rinse for an additional 10 minutes of heated rinse.
Tough Scrub - This option adds and additional 5 minutes of heated wash to the pre-wash, an additional 12 minutes of heated wash to the main wash and an additional 5 minutes of heated rinse to the second pre-rinse.
Tough Scrub Plus - This option is the same as **Tough Scrub** but the main wash temp check is boosted to 145°F.

AUTO CLEAN CYCLE (97 Minutes - min) (131 Minutes - max)

FILL 1:36 min 1:46 max	HEATED PRE WASH 8:00	DRAIN 2:20	FILL 1:36 min 1:46 max	DET DISP	HEATED WASH 26:00	HEATED WASH 2:00	TEMP CHECK 140°F	DRAIN 2:00	FILL 1:36 min 1:46 max	HEATED PRE RINSE 10:00	DRAIN 2:00	FILL 1:36 min 1:46 max	HEATED PRE RINSE 10:00	DRAIN 2:00	FILL 1:36 min 1:46 max	HEATED RINSE 10:00	HEATED RINSE 10:00	TEMP CHECK 145°F	RINSE AID DISP	RINSE 5:00	DRAIN 2:00	FILL 0:02	**DRY CYCLE** 30:00
		SKIP?				**SKIP?**			**SKIP?**					**SKIP?**									

Available Options:
Extra Rinse - This option adds an additional fill between the main wash and the final rinse for an additional 5 minutes of unheated rinse.
Tough Scrub - This option overrides the sensor's decision to skip cycle functions.
Tough Scrub Plus - This option is the same as **Tough Scrub** but the main wash temp check is boosted to 145°F.

DRY CYCLE (Models without **160° Wash** option)

VENT CLOSED				VENT OPENED											
HEATER ON 3:00	HEATER OFF 1:30	HEATER ON 1:00	HEATER OFF 1:30	HEATER ON 1:00	HEATER OFF 1:30	HEATER ON 1:00	HEATER OFF 1:30	HEATER ON 1:00	HEATER OFF 1:30	HEATER ON 1:00	HEATER OFF 1:30	HEATER ON 1:00	HEATER OFF 1:30	HEATER ON 1:00	HEATER OFF 9:30

Note: If **Heated Dry** is not selected, the heater will not be activated during the dry cycle.

DRY CYCLE (Models with **160° Wash** option)

VENT CLOSED			VENT OPENED								
HEATER ON 3:00 or 1:00	HEATER OFF 3:00	HEATER ON 1:00	HEATER OFF 3:00	HEATER ON 1:00	HEATER OFF 3:00	HEATER ON 1:00	HEATER OFF 3:00	HEATER ON 1:00	HEATER OFF 3:00	HEATER ON 1:00	HEATER OFF 7:00 or 9:00

Notes: If **Heated Dry** is not selected, the heater will not be activated during the dry cycle.
If **160° Wash** is selected, the first two minutes of heating is changed to 2 minutes of unheated at the end of the dry cycle.

Temperature Options (Available on select models)
Sanitize: If the **Sanitize** option is available for a given cycle, it forces a temp check at the end of the main wash, a 154°F temp check prior to the rinse aid dispense in the final rinse and adds an additional 5 minutes of rinse before the rinse aid dispense.
160° Wash: If the **160° Wash** option is available for a given cycle, it forces a 160°F temp check prior to the rinse aid dispense in the final rinse.

Notes
1. All times are approximate.
2. Temperature checks force a maximum 20 minute heating delay to reach the desired temperature.
3. The **Auto Clean** cycle definition gives the minimum and maximum possible cycle lengths. Actual cycle length and executed cycle functions will vary based on the sensor input.
4. Fill length varies between different models.

SKIP?

This represents the portion of a cycle that **MAY** be omitted. The determination of whether a segment is skipped or not is made by input from the sensor.